RIC70849EVAL1 test procedure

Test procedure to verify proper operation

About this document

Scope and purpose

The purpose of this document is to specify how RIC70849EVAL1 is tested after fabrication to ensure it is free of defects. The steps outlined in this document verify basic operation. Only ship units that pass every test. If a board fails a test it may be reworked.

Intended audience

This document is for PCB assembly vendor, specifically technician that will run validation test to ensure that RIC70849EVAL1 was fabricated and assembled properly

Table of contents

About this document **1**
Table of contents **2**
1 Visual inspection **3**
2 Electrical testing ..... **Error! Bookmark not defined.**
2.1 Equipment 5
2.2 Equipment configuration 5
2.2.1 DC power supply 5
2.2.2 Electronic load 5
2.2.3 Multimeters 5
2.2.4 Oscilloscope 5
2.3 Board connection 6
2.4 Test procedure 7
2.4.1 Test shutdown 8
3 Results **9**
3.1 Pass 9
3.2 Fail 9
Revision history **10**
Disclaimer **11**

Table of contents

1 Visual inspection

When board is first received visually inspect the board for the following conditions. If all conditions are met the board is considered pass. If any condition is not met the board is considered failed. Do not run any electrical test until the board passes visual inspection.

- Free of any PCB manufacturing defects
- No residue flux on PCB
- Connectors X14, X20 and X27 have jumper populated on them
- Connector X15, X29, X30 and X32 have jumper populated between pin 1 and pin 2
- Connectors X9, X25 and X35 do NOT have jumper populated on them
- Switch S1 (EN) is toggled to “ON” state per PCB silkscreen (right when looking at board from bottom of board)

Below is image of RIC78049EVAL1 that passes all requirements

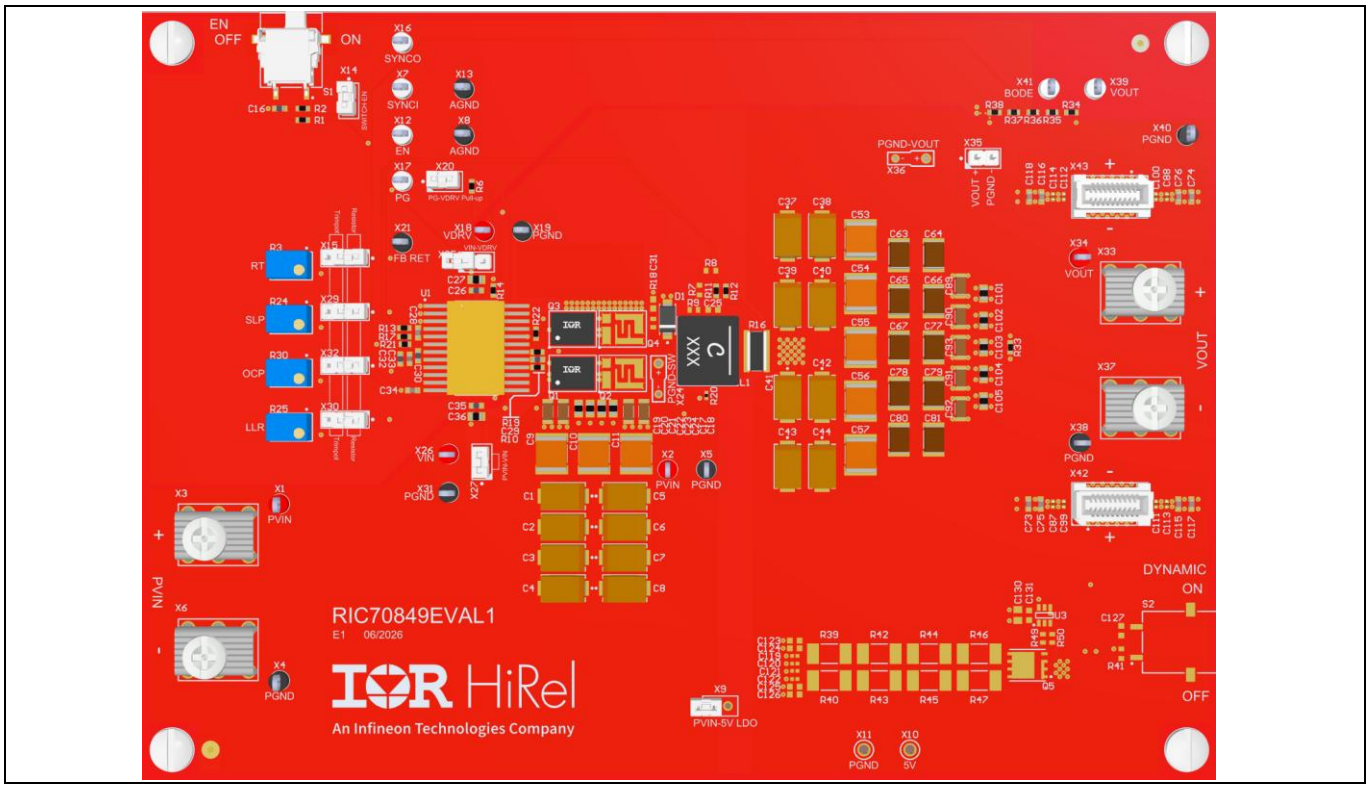

Figure 1 RIC70849EVAL1 top view with proper configuration

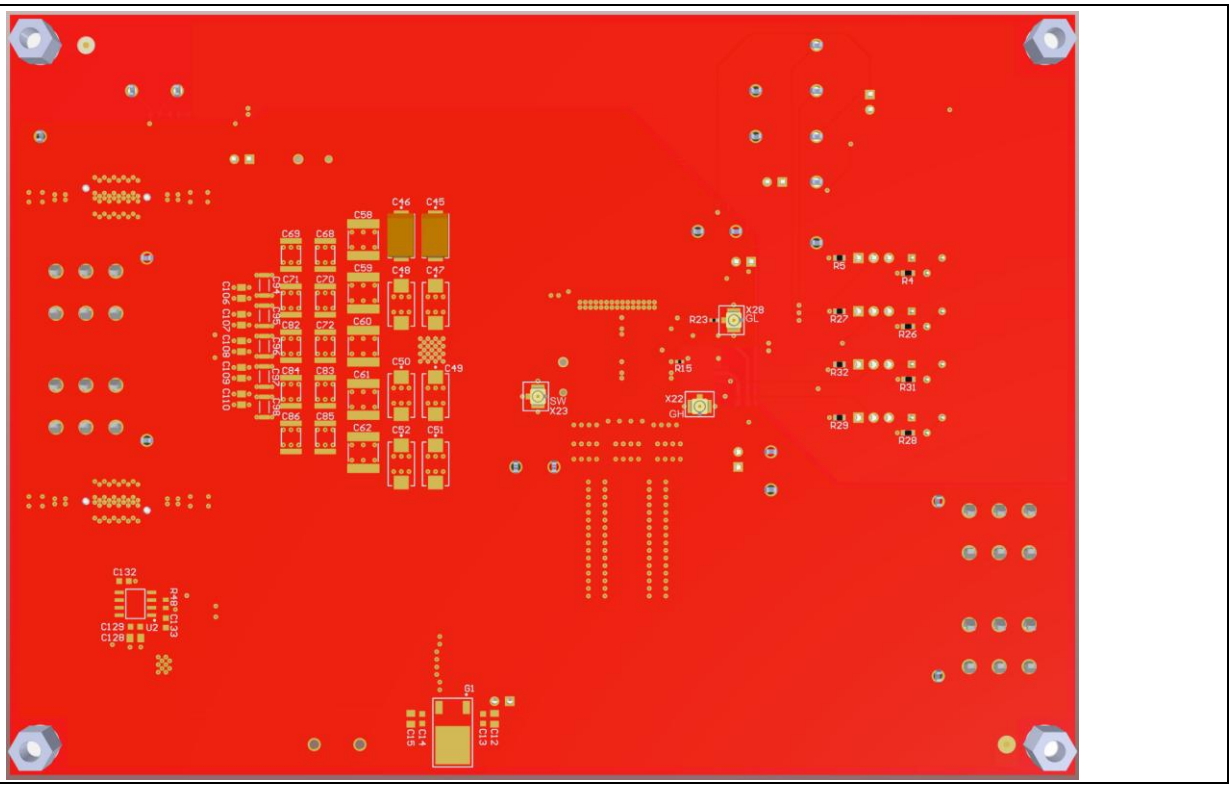

Figure 2 RIC70847EVAL1 bottom view with proper configuration

2 Electrical testing

After passing visual inspection run electrical test per the following specification.

2.1 Equipment

The following equipment are minimum specifications for equipment required for electrical testing. Equivalent equipment that meets or exceeds specification listed are acceptable.

- DC power supply with 5 V output capable of at least 3 A output current
- Electronic load capable of at least 10 A at 0.8 V
- Multimeters capable of measuring DC voltage up to 15 V or higher
- Oscilloscope and single probe that supports voltage measurement of at least 10 V and bandwidth of at least 250 MHz

2.2 Equipment configuration

Figure 3 shows the recommended equipment configuration. Follow the instruction below to setup the respective equipment.

2.2.1 DC power supply

The DC power supply should be set in voltage mode with an output voltage of 5 V and current limit of 3 A or higher.

2.2.2 Electronic load

Electronic load should be set in constant-current (CC) mode with a current of 10 A

2.2.3 Multimeters

Multimeters should be setup to measure input voltage VIN and output voltage VOUT across input and output test points in the PCB. Set up measurement in DC volts for both multimeters.

OPTIONAL: If input and output current are measured, it is recommended to use shunt resistors connected in series between DC power supply-input connector and electronic load-output connector respectively. Connect multimeters across the shunt resistors and set the measurement in DC volts. The respective conversion from volts to amperes should be used when measuring both currents.

Figure 3 shows the recommended setup for all the multimeters.

2.2.4 Oscilloscope

The oscilloscope should be setup to monitor (SW-PGND) and (VOUT-PGND) signals. It is recommended to use tip and barrel spring at the tip of the voltage probes for more accurate measurements as shown in Figure 4. (SW-PGND) should be measured across X24 PCB test point and (VOUT-PGND) across X36 PCB test point. The following configurations for the oscilloscope measurements are recommended

- (VOUT-PGND) channel: 20 mV/div with a DC offset of 800mV and a bandwidth of 20MHz
- (SW-PGND) channel: 5 V/div with no DC offset and a bandwidth of 250MHz
- Time scale: 1 us/div
- Trigger: on SW channel, rising edge at 2.8 V

2.3 Board connection

Equipment shall be connected to RIC70849EVAL1 as described in Table 1.

Table 1 Equipment connection points on RIC70849EVAL1

Equipment	Positive (+) connection point	Negative (-) connection point
DC power supply	X3	X6
Electronic load	X33	X37
Multimeter V1	X1	X4
Multimeter V2	X34	X38
Multimeter A1 (optional)	Across shunt resistor	Across shunt resistor
Multimeter A2 (optional)	Across shunt resistor	Across shunt resistor
Oscilloscope channel for (SW-PGND)	X24+	X24-
Oscilloscope channel for (VOUT-PGND)	X36 +	X36 -

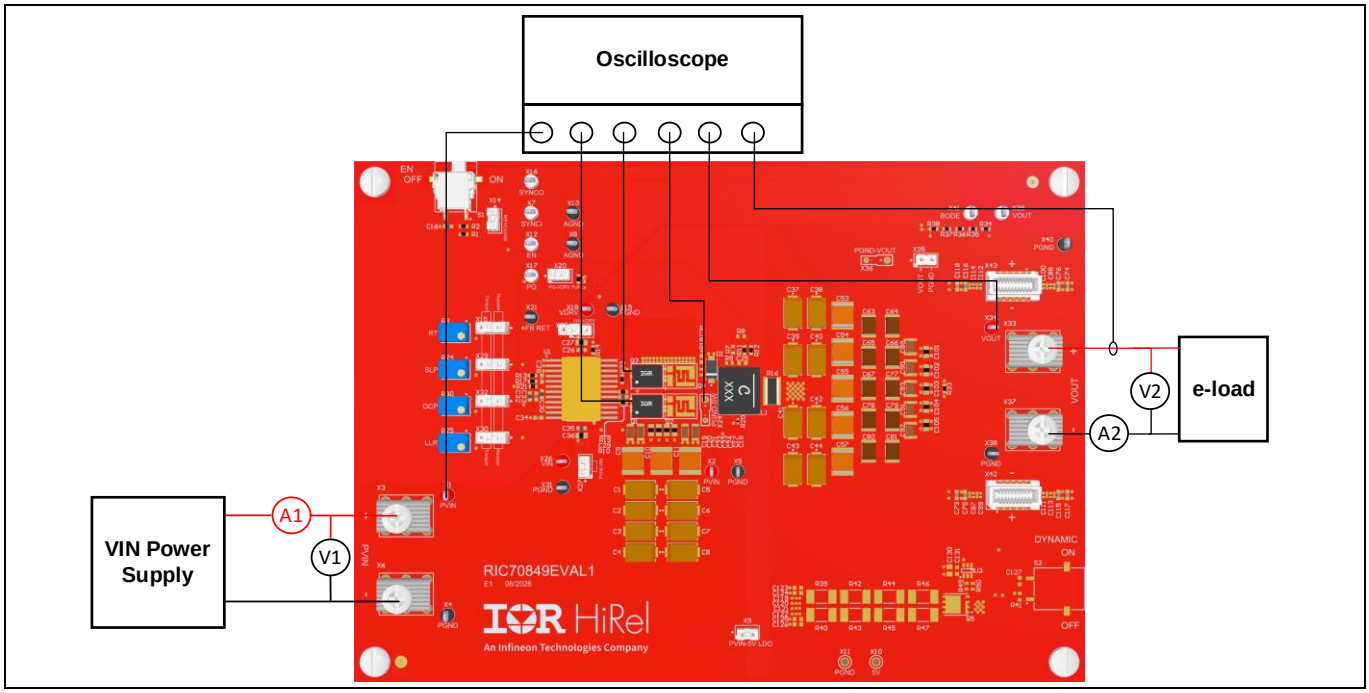

Figure 3 Recommended configuration of RIC70849EVAL1

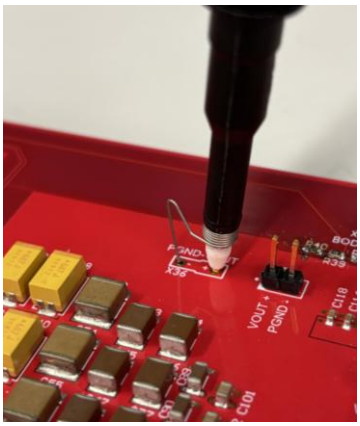

Figure 4 Tip and barrel spring probing

2.4 Test procedure

The following test procedure shall be followed to verify operation. If board completes every step the board is considered pass. If the board fails any step, immediately stop the test and the board is considered fail. Once test is completed, either through pass or fail, shutdown procedure outlined in Test shutdown shall be followed.

1. Configure DC power supply, electronic load and oscilloscope as show in Equipment configuration. Make sure the DC power supply and electronic load are disable.
2. Enable DC power supply.
3. Check V2 measurement. V2 should be reading VOUT within 0.78V<VOUT<0.82V range
4. Enable electronic load and check V2 measurement again. V2 should be reading VOUT within 0.78V<VOUT<0.82V range.
5. Observe (SW-PGND) and (VOUT-PGND) waveforms in the oscilloscope. (SW-PGND) should be a square pulsating waveform with some ringing at the switching transitions. (VOUT-PGND) should be a DC waveform with a mean value around 0.8 V. Example of a pass waveform is shown in Figure 5.
6. If VOUT readings are out of the specified range or (SW-PGND) and (VOUT-PGND) waveforms are significantly different than Figure 5, the board should be marked as a fail.



Figure 5 Example oscilloscope waveform of passing board

2.4.1 Test shutdown

Once the test is completed, the following procedure shall be followed to power down and disconnect the board from equipment.

1. Disable DC power supply
2. Disable electronic load
3. Disconnect DC power supply, electronics load and oscilloscope

3 Results

If the board passed the visual inspection and electrical test, it is considered a pass. If the board fails either the visual inspection or the electrical test, it is considered a fail.

3.1 Pass

If RIC70849EVAL1 board passes both visual and electrical test it shall be shipped to IR HiRel in a sealed ESD bag.

3.2 Fail

If RIC70849EVAL1 board fails either visual or electrical test, it should be shipped back to IR HiRel for additional inspection.

Revision history

Document revision	Date	Description of changes
1.0	2026-06-22	Initial version

Trademarks
All referenced product or service names and trademarks are the property of their respective owners.

Edition 2026-02-09

Published by

Infineon Technologies AG

81726 Munich, Germany

© 2026 Infineon Technologies AG. All Rights Reserved.

Do you have a question about this document?

Email: erratum@infineon.com

Document reference

Important notice

The information contained in this application note is given as a hint for the implementation of the product only and shall in no event be regarded as a description or warranty of a certain functionality, condition or quality of the product. Before implementation of the product, the recipient of this application note must verify any function and other technical information given herein in the real application. Infineon Technologies hereby disclaims any and all warranties and liabilities of any kind (including without limitation warranties of non-infringement of intellectual property rights of any third party) with respect to any and all information given in this application note.

The data contained in this document is exclusively intended for technically trained staff. It is the responsibility of customer's technical departments to evaluate the suitability of the product for the intended application and the completeness of the product information given in this document with respect to such application.

For further information on the product, technology, delivery terms and conditions and prices please contact your nearest Infineon Technologies office (www.infineon.com).

Warnings

Due to technical requirements our products may contain dangerous substances. For information on the types in question, please contact your nearest International Rectifier HiRel Products, Inc., an Infineon Technologies company, office.

International Rectifier HiRel components may only be used in life-support devices or systems with the expressed written approval of International Rectifier HiRel Products, Inc., an Infineon Technologies company, if a failure of such components can reasonably be expected to cause the failure of that life-support device or system, or to affect the safety and effectiveness of that device or system.

Life support devices or systems are intended to be implanted in the human body, or to support and/or maintain and sustain and/or protect human life. If they fail, it is reasonable to assume that the health of the user or other persons may be endangered.